☐ Model 225 — Recessed

☐ Model 225-10 — Semi-Recessed (recesses 4"; projects 3½")

☐ Model 225-11 — Surface-Mounted (projects 7½")

☑ Standard Series — Satin Finish

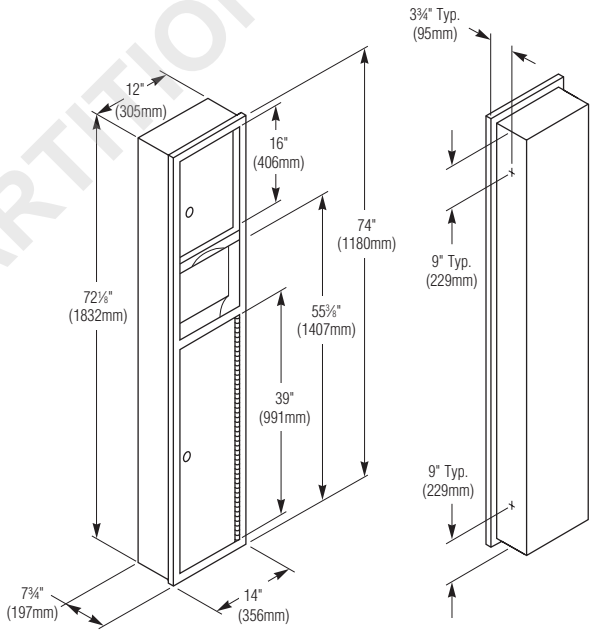

Product Materials

CABINET: 22 gauge stainless steel with exposed surfaces in architectural satin finish. Welded construction with seamless corners and burr-free edges.

FLANGE: 22 gauge stainless steel with exposed surfaces in architectural satin finish. One piece seamless construction, 1" wide with ¼" return.

DOORS: 18 gauge stainless steel. Warp resistant, with full length piano hinge and tumbler lock keyed like other Bradley units.

TOWEL DISPENSER: 22 gauge stainless steel. Rolled edge on dispenser opening.

WASTE RECEPTACLE INSERT: leakproof molded plastic.

PUSH FLAP DOOR (optional): 22 gauge stainless steel with exposed surfaces in architectural satin finish. Heavy duty stainless steel piano hinge. Self-closing flap door is embossed "PUSH."

Capacity

Towel Dispenser — 1000 single-fold, 800 multi-fold or 600 C-fold paper towels. Waste Receptacle Insert — 9.2 gal. (1.24 cu. ft.)

Operation

Towel dispenser holds single-fold, multi-fold or C-fold towels without use of special adaptor. Waste receptacle insert removable by unlocking receptacle door.

Installation

Verify all rough-in dimensions prior to installation. Recessed unit requires rough wall opening 12½"W x 72¾"H x 7¾"D (Semi-recessed unit only 4" deep). Secure to framing with mounting screws (included) at holes provided. Shim at screw points as required. Surface-mounted units must have holes drilled by installer.

Guide Specification

Recessed combination towel dispenser and waste receptacle shall be fabricated of 22 gauge stainless steel with exposed surfaces in satin finish and burr-free edges. Doors of nonflexing construction, equipped with full length piano hinges and tumbler locks. Towel dispenser capacity 1000 single-fold, 800 multi-fold or 600 C-fold towels. Removable 9.2 gal. leakproof molded plastic insert for waste receptacle.

Overall dimensions: 14"W x 74"H x 7¾"D.

Optional Features

Feature	Suffix
☐ Self-closing push-flap door	-35

Washroom Accessories
Document No. 8080

WWW.TOILETPARTITIONS.COM

© 2014 Bradley
P.O. Box 309, Menomonee Falls, WI 53052-0309
800 BRADLEY (800 272 3539) +1 262 251 6000
bradleycorp.com