9562

Phenolic Bariatric Shower Seat

- ☑ ADA Compliant
- ☑ Color – White ***Bradex®***

Product Materials

FRAME: satin finish stainless steel, 1½" HDPE support bar and 18 gauge 1" diameter tubing.

MOUNTING FLANGES: 7 gauge satin finish stainless steel with three mounting holes provided in each flange for installation.

LOWER SUPPORT BRACKET: 16 gauge satin finish stainless steel.

SEAT: ½" thick solid phenolic. White matte finish Melamine bonded onto the phenolic for color. All exposed edges are machined smooth to a uniform dark finish.

Operation

Hinged seat folds up and out of the way when not in use. When properly installed, seat can support up to 500 lbs. – static load.

Installation

Verify all rough-in dimensions prior to installation. Provide concealed backing or anchors as specified by architect before finished wall is applied. Secure to wall with mounting screws (not included) at holes provided. Locate mounting holes at appropriate height above finished floor to meet seat height requirement. Secure lower support bracket to wall at appropriate location. Mounting kit available from Bradley. For more information, visit bradleycorp.com.

WARNING: Be sure to use reinforced backing behind wall where mounting screws or anchoring devices are installed to ensure adequate support for the shower seat. All anchoring devices (supplied by installer) must be appropriate for specific wall construction. Severe personal injury and/or property damage may result from improper mounting.

Guide Specification

Folding white phenolic shower seat shall be ½" thick phenolic with Melamine bonded to its phenolic core. Secured to the frame of 18 gauge, 1" diameter tubing, and 1½" HDPE support bar. Support leg contained in 16 gauge lower support bracket. Shower seat must meet or exceed ADA guidelines.

Overall dimensions: 28½"W x 15"D x ½" thick.

ADA Compliant

- ☑ Consult local and national accessibility codes for proper installation guidelines.
- ☑ Conformity and compliance to local and national codes is the responsibility of the installer.

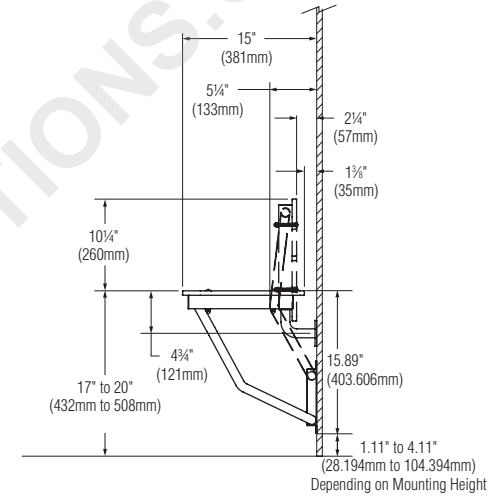

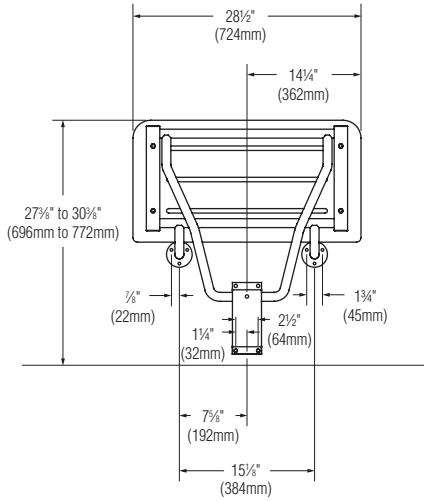

Orders composed of products indicated as ***Bradex®*** will be available to ship in three days after receipt of order at the factory. There is no pricing penalty for this service from Bradley.

This information is subject to change without notice.
Bradley_ShowerSeat_9562

© 2018 Bradley
P.O. Box 309, Menomonee Falls, WI 53052-0309
800 BRADLEY (800 272 3539) +1 262 251 6000
bradleycorp.com

WWW.TOILETPARTITIONS.COM