Security shelf with toothbrush slots:

☐ **Model SA50 – Chase Mounted**

Product Materials

CHASE MOUNTED SHELF WITH FOUR TOOTHBRUSH SLOTS: 14 gauge stainless steel in architectural satin finish. All welds are ground smooth, with polished corners and burr-free edges.

Overall dimensions: 18"W x 2 9/16"H x 4"D

Installation

Verify all rough-in dimensions prior to installation. Back of shelf has welded anchor nuts to receive threaded studs (provided).

Standard Selections

WALL THICKNESS (must specify)
☐ Specify Thickness:_____

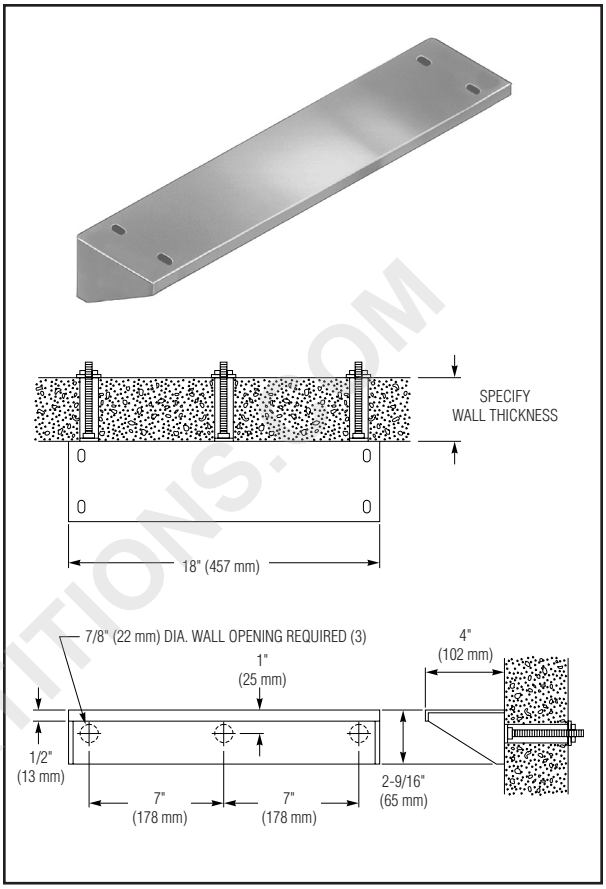

WWW.TOILETPARTITIONS.COM

© 2017 Bradley
P.O. Box 309, Menomonee Falls, WI 53052-0309
800 BRADLEY (800 272 3539) +1 262 251 6000
bradleycorp.com