1¼" O.D. heavy duty stainless steel swing up grab bar:

☐ **Standard Model 8370-103 *Bradex*®**

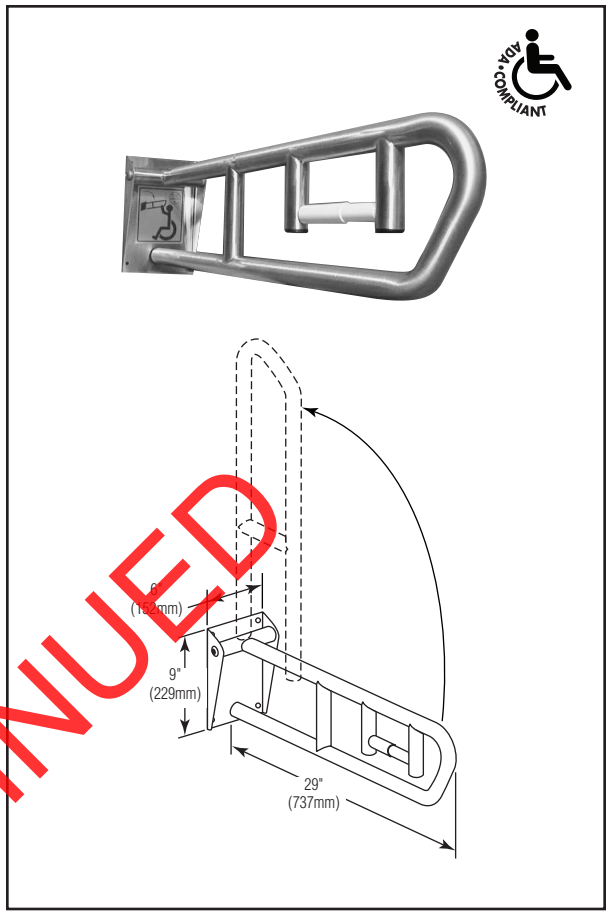

Product Materials

TUBING: 1¼" O.D. 18 gauge stainless steel, seamless construction with exposed surfaces in architectural satin finish. All welds ground and polished to blend. Mandrel bending process maintains uniform bar diameter.

WALL PLATE: 14 gauge stainless steel with exposed surfaces in architectural satin finish. Concealed mechanism holds bar up and out of the way.

TISSUE DISPENSER: 1¼" O.D. 18 gauge stainless steel welded to bar. All welds ground an polished to blend. Spindle of ABS plastic with concealed spring.

Strength

When properly mounted, all Bradley heavy-duty grab bar systems meet or exceed the requirements of ANSI Standard A117.1, the ADA and ABA Accessibility Guidelines for Buildings and Facilities (ADAAG), and the Uniform Federal Accessibility Standard (UFAS). Wall must be reinforced in the area of the grab bar in order to support the load it is intended to support.

Operation

Grab bar is manually lowered to horizontal support position and raised for departure. Bar is designed to prevent it from accidentally falling into position. Bar operates with less than 5 pounds of force.

Installation

Verify all rough-in dimensions prior to installation. Secure to wall where adequate in-wall backing exists. Use bar as template to locate mounting holes. Drill holes and set anchors as appropriate. Mount grab bar and secure mounting screws. For more information on Bradley grab bar mounting kits, visit bradleycorp.com. Mark point of contact with wall when bar is in raised position. Secure bumper to wall with screw at this point.

Optional Features

Features		Suffix
☐	Safety-grip finish	-2

Guide Specification

Swing up grab bar shall be stainless steel with exposed surfaces in architectural satin finish. Install with Bradley Mounting Kits as indicated. Only available in size indicated on drawing.

ADA Compliant

- ☑ Consult local and national accessibility codes for proper installation guidelines.
- ☑ Conformity and compliance to local and national codes is the responsibility of the installer.

DISCONTINUED

Orders composed of products indicated as ***Bradex***® will be available to ship in three days after receipt of order at the factory. There is no pricing penalty for this service from Bradley.

This information is subject to change without notice.

© 2015 Bradley
P.O. Box 309, Menomonee Falls, WI 53052-0309
800 BRADLEY (800 272 3539) +1 262 251 6000
bradleycorp.com