TOILET PARTITIONS.com

Fry Specialty Inc
PO Box 26030
Yuma, AZ 85367

Estimate

ADDRESS
WITZ INCORPORATED
DUKE POPOWITZ
RE: URBAN AIR - BROCKTON, MA

SHIP TO
Valued Customer
Project address: TBA

ESTIMATE 11264
DATE 09/16/2024

SALES REP
CHRISTINA 619-635-2888

ITEM	DESCRIPTION	QTY
MATERIAL-EXPENSE	HDPE/SOLID PLASTIC HINY HIDERS BY SCRANTON	
STYLE	FLOOR MOUNTED/OVERHEAD BRACED * 71-1/2" DOORS/PANELS	
HARDWARE	ALUM STIRRUP BRACKETS, ST/STL SHOES, 8" ALUM WRAP HINGES, ALUM (EMERGENCY ACCESS) LATCH/STRIKE AND 2 PULLS PER HDCP DOOR	
COLOR	BLACK, OP	
STALLS	INCLUDED IN PROPOSAL	9
SCREENS	WALL HUNG 24 X 48 INCLUDED IN PROPOSAL	2
STANDARD FREIGHT INCLUDED	BASED ON (1) SINGLE SHIPMENT TO 02301	
	*** SALES TAX WILL BE ADDED IF SHIPPING TO CA, TN, TX, OK, NY, FL, GA, MA, NJ, WA, AZ, MI, MN, NC, VA, IL AND MD.	

- QUOTES ARE VALID FOR 30 DAYS
- QUANTITIES & DESCRIPTIONS NOT GUARANTEED TO AGREE WITH PLANS AND/OR SPECS. IT IS YOUR RESPONSIBILITY TO REVIEW ENTIRE QUOTE/SUBMITTAL PRIOR TO BIDDING YOUR PROJECT. YOU ARE ALSO RESPONSIBLE FOR VERIFYING LOCAL MUNICIPALITY / CODE COMPLIANCE.

ANY CHANGES MADE CAN IMPACT PRICING.

SUBTOTAL	11,000.00
TAX (0%)	0.00
TOTAL	**$11,000.00**

Accepted By

Accepted Date

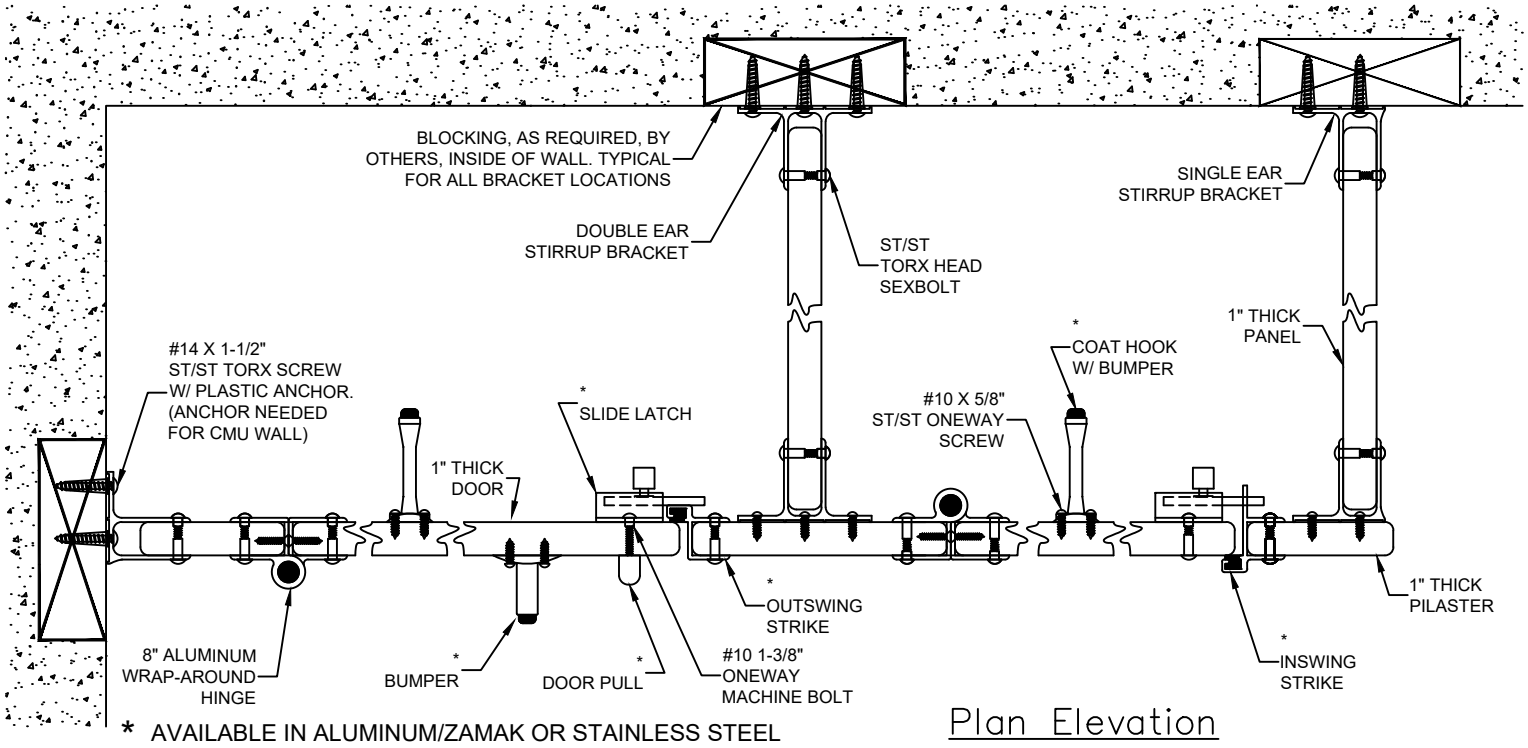

* AVAILABLE IN ALUMINUM/ZAMAK OR STAINLESS STEEL

Plan Elevation

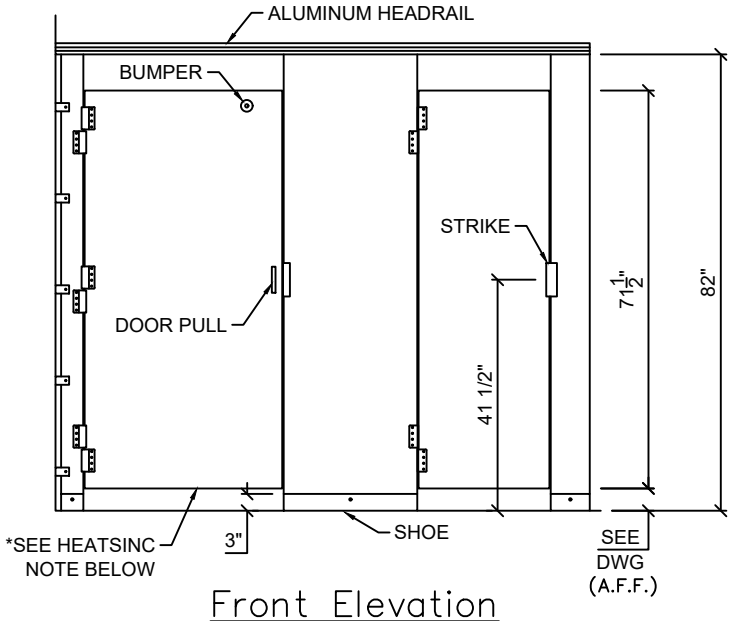

Front Elevation

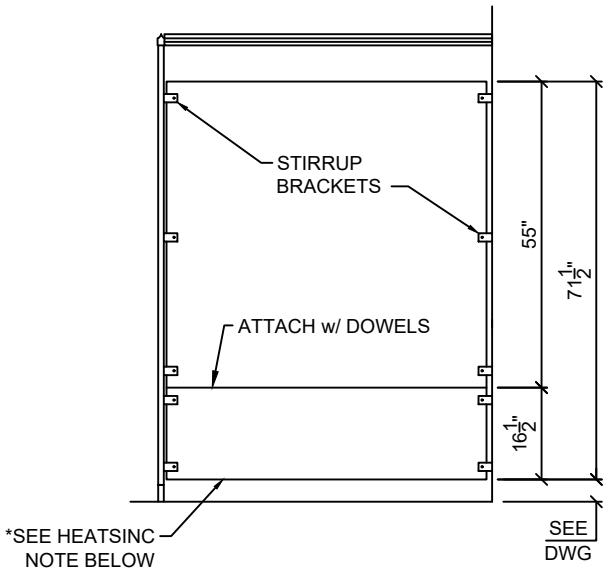

Side Elevation

SCRANTON PRODUCTS

HINY HIDERS

801 E COREY ST. SCRANTON, PA. 18505 Phone (570)348-0997

STANDARD ELEVATIONS

(Drawings are not to scale)

*Floor Mounted Overhead Braced

*8" Aluminum Wrap Around Hinge

*Stirrup Brackets (Aluminum or Stainless Steel Available)

Note: "Job-Specific Specifications" for all orders are located on the top of the shop drawing layouts.

** HEATSINC NOTE: Heatsinc is to be placed on the bottom of the panels & doors. (If specified)*

Details

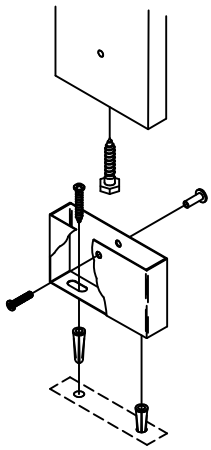

Floor Mount

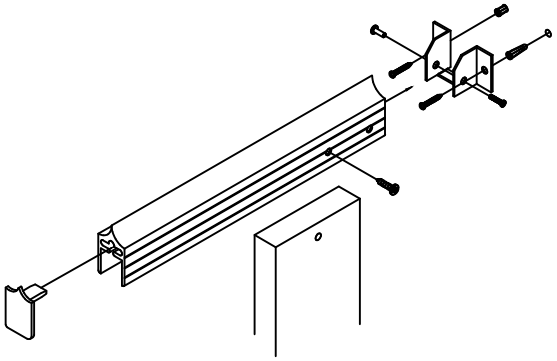

Headrail Brace

71 1/2"H EXTENDED PANELS

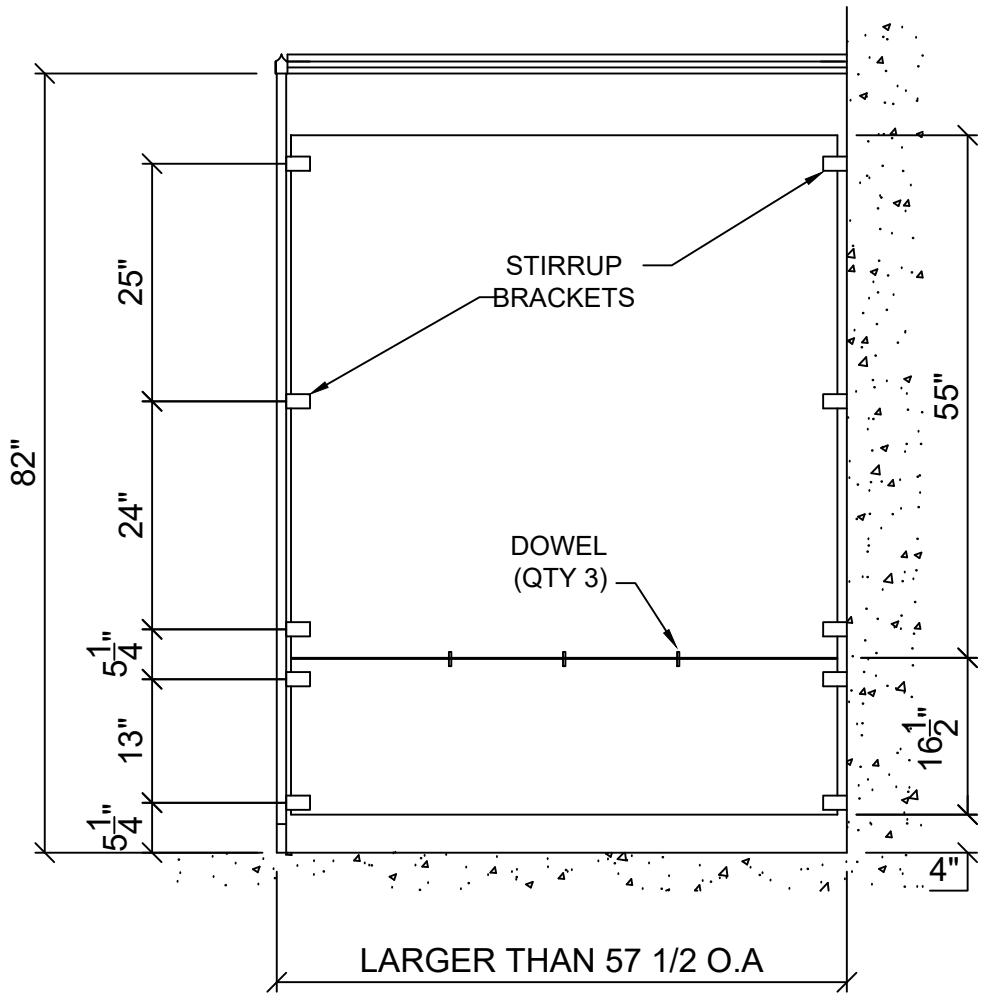

Stacked panels provided on stalls deep than 57 1/2" OA

SCRANTON PRODUCTS | HINY HIDERS

801 E COREY ST. SCRANTON, PA. 18505 Phone (570)348-0997

Wall Hung Screen Elevation with Stirrup Brackets

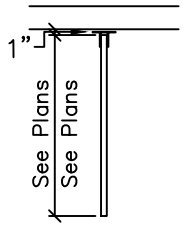

Plan View

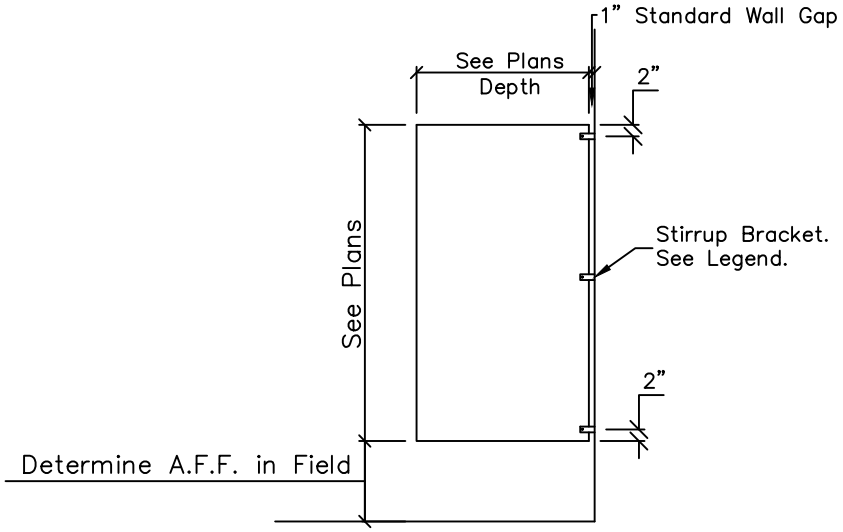

Side View

SINGLE & DOUBLE EAR BRACKET LEGEND (Note: Extra high screens will be supplied with up to (5) stirrups, per connection, for support)
Aluminum – Available
Stainless Steel – Available
Plastic – N/A

SCRANTON PRODUCTS | HINY HIDERS

801 E COREY ST. SCRANTON, PA. 18505 Phone (570)348-0997

STANDARD ELEVATIONS

(Drawings are not to scale)

*Urinal Screens/ Privacy Screens

*Stirrup Brackets

Note: **"Job-Specific Specifications" for all orders are located on the top of the shop drawing layouts.**

** HEATSINC NOTE: Heatsinc is to be placed on the bottom of the panels & doors. (If specified)*

NOTES:

1. SEE PLANS FOR SCREEN DEPTH & HEIGHT. SCREEN WILL BE PROVIDED AS QUOTED/DRAWN UNLESS OTHERWISE DIRECTED.
2. ANY SCREEN 30" DEPTH OR GREATER IS RECOMMENDED TO HAVE A FLOOR SUPPORTED PILASTER FOR STABILITY.

CUSTOMER NOTES:

Job Specs	Stall Mounting Style: Floor Mounted Headrail Braced	Pilaster Height: 82.75"	Material Option: Hiny Hider - Standard Color Collection option (does not meet NFPA 286 or ASTM E84) Color: Black "Orange Peel"

Bracket Type: Aluminum Stirrups Shoe Type: Stainless	Hinge Type: 8" Alum. Wrap Around, 2-per Door Door Hrdw Type: Aluminum (Emergency Access), .	Pencil Slot: No Heat-sinc: No Fasteners: 2 1/2", 3/4" Torx (Clean Look)

Room Name: MENS

4" AFF - 71 1/2" High Doors, 71.5" High Panels
16.5 High stacked panels provided on stalls deeper than 57 1/2"OA

Notes:

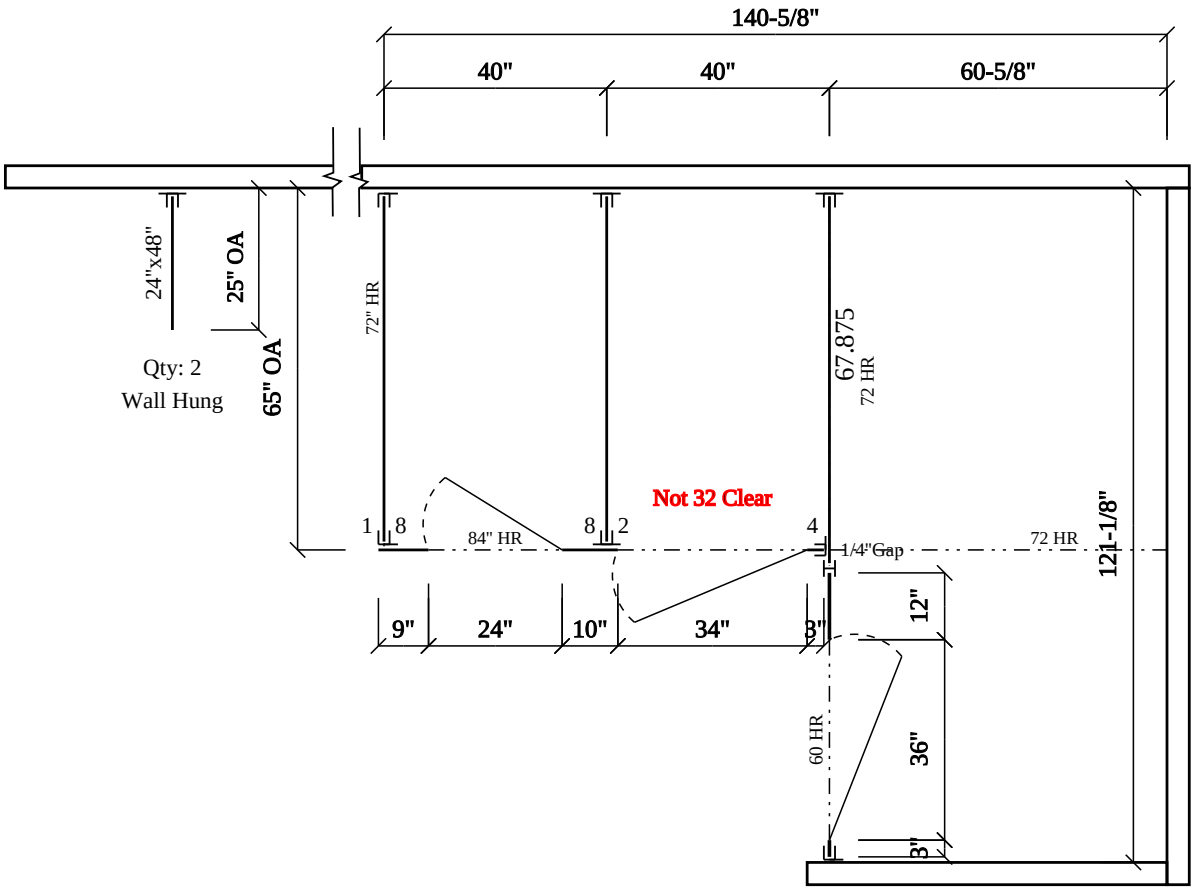

Pilaster 1" Gap at wall

SCRANTON PRODUCTS
HINY HIDERS
801 E COREY ST. SCRANTON, PA. 18505 Phone (570)348-0997

CUSTOMER NAME:	SCALE:	SERIAL #: C-1420876 - DWG C-1420881 - Room
FRY SPECIALTY COMPANY	NTS	REVISION #: Rev 3
PROJECT NAME:	DATE:	SO#
URBAN AIR	9/16/2024	DRAWN BY: Rob Fry

Standard Notes:
1. Doors larger than 30" are to be set to the closed position.
2. Where pilasters and panels meet there is a 1/2" space.
3. Where pilasters and/or panels meet a wall there is a 1" space.
4. Headrail shall be supplied in 12" increments, ranging from 36" to 84".
5. Pilasters over 24" will receive a doghouse detail.

Job Specs	Stall Mounting Style: Floor Mounted Headrail Braced	Pilaster Height: 82.75"	Material Option: Hiny Hider - Standard Color Collection option (does not meet NFPA 286 or ASTM E84) Color: Black "Orange Peel"

Bracket Type: Aluminum Stirrups Shoe Type: Stainless	Hinge Type: 8" Alum. Wrap Around, 2-per Door Door Hrdw Type: Aluminum (Emergency Access), .	Pencil Slot: No	Heat-sinc: No Fasteners: 2 1/2", 3/4" Torx (Clean Look)

Room Name: WOMENS

4" AFF - 71 1/2" High Doors, 71.5" High Panels
16.5 High stacked panels provided on stalls deeper than 57 1/2"OA

Notes:

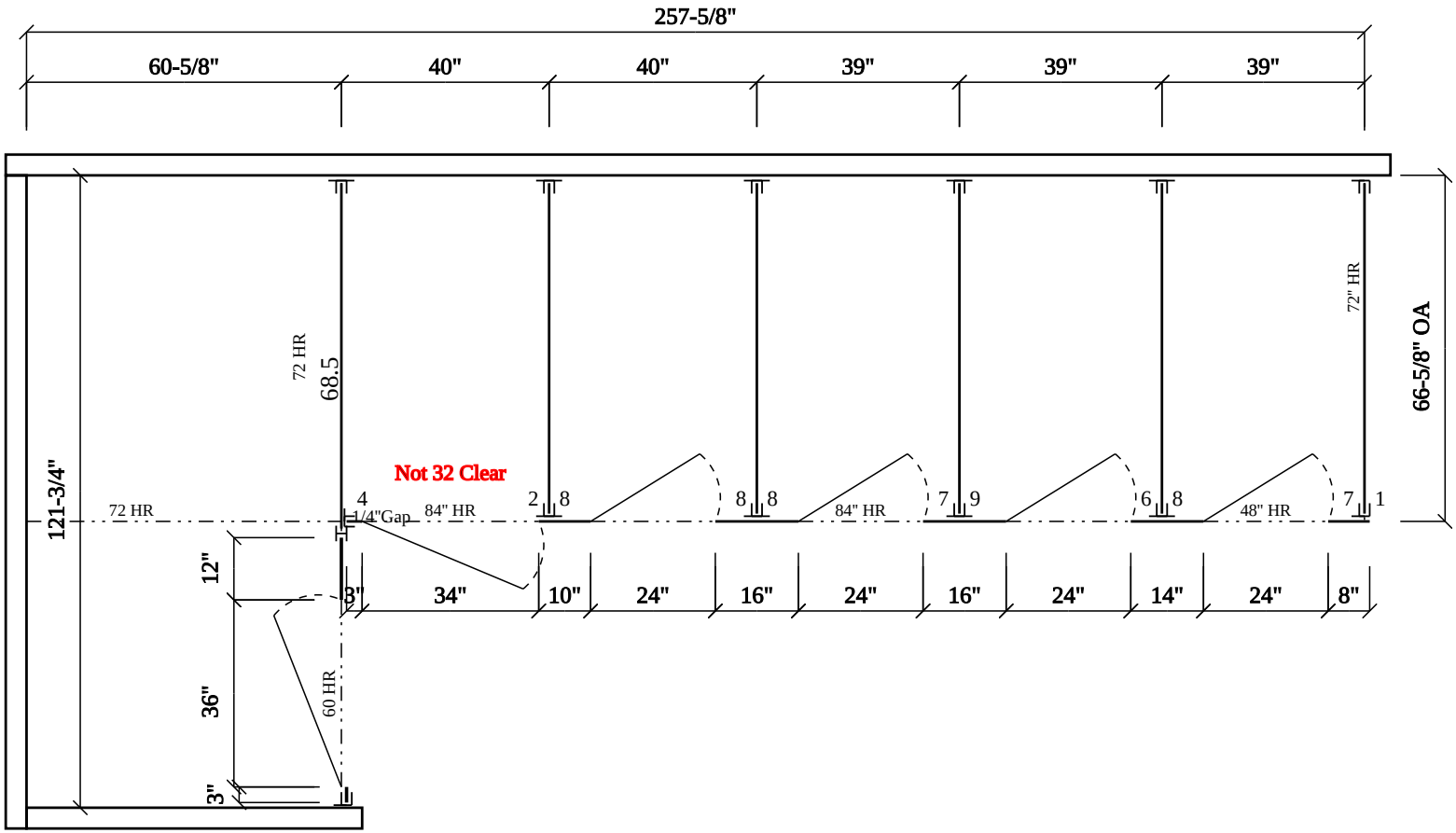

Pilaster 1" Gap at wall

SCRANTON PRODUCTS
HINY HIDERS
801 E COREY ST. SCRANTON, PA. 18505
Phone (570)348-0997

CUSTOMER NAME: FRY SPECIALTY COMPANY	SCALE: NTS	SERIAL #: C-1420876 - DWG C-1420893 - Room	Standard Notes:
PROJECT NAME: URBAN AIR	DATE: 9/16/2024	REVISION #: Rev 3 SO#	1. Doors larger than 30" are to be set to the closed position. 2. Where pilasters and panels meet there is a 1/2" space. 3. Where pilasters and/or panels meet a wall there is a 1" space. 4. Headrail shall be supplied in 12" increments, ranging from 36" to 84". 5. Pilasters over 24" will receive a doghouse detail.
		DRAWN BY: Rob Fry	

COLOR & TEXTURE OPTIONS

TRADITIONAL
COLOR COLLECTION

BLACK OP

SHALE OP

GLACIER GREY OP

BLACK EX

CHARCOAL GREY OP

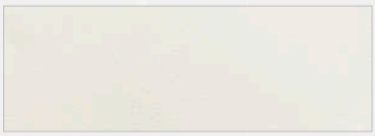
WHITE OP

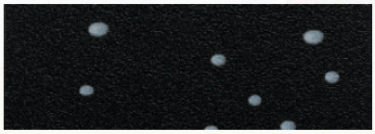
PAISLEY OP

GREY OP

BOLD
COLOR COLLECTION

HUNTER GREEN OP

BLUEBERRY OP

BURGUNDY OP

FOSSIL OP

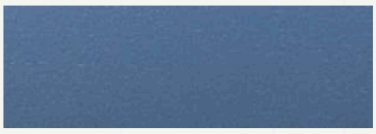
FRENCH BLUE OP

CUSTOM COLORS AVAILABLE UPON REQUEST

Color matching is limited by printing process. Actual samples are available and recommended prior to color selections.

*Special orders require extended lead times. Minimum order requirements may apply.

SCRANTON LEAD TIME ESTIMATES	
LEAD TIME	**OFFICE**
3-4 BUSINESS DAYS	QUOTE
5-6 BUSINESS DAYS	SHOP DRAWNGS (PARTITIONS/LOCKERS)
6-7 BUSINESS DAYS	PARTITIONS RELEASES (CUSTOMER SERVICE & DRAFTING PROCESSING TIME)
6-7 BUSINESS DAYS	LOCKER RELEASES
LEAD TIME	**MANUFACTURING**
9-11 BUSINESS DAYS	HINY HIDERS (PENDING SHEET AVAILABILITY)
8-9 WEEKS	TUFFTEC/DURALIFE LOCKERS
9-11 BUSINESS DAYS	ECLIPSE PARTITIONS
9-11 BUSINESS DAYS	ARIA PARTITIONS
LEAD TIME	**COMPONENT ORDERS**
4-6 BUSINESS DAYS	PLASTIC PARTS AND S7 REPLACEMENTS
4-6 BUSINESS DAYS	HARDWARE
3-4 WEEKS	LOCKERS (VARIES BY STYLE/GENERATION)

Scranton Products Limited Warranty

Scranton Products' Ecliples Partitions™, Hiny Hider® Partitions, Resistall Partitions®, Tufftec Lockers®, Tufftec™ benches, Duralife Lockers™, Scranton Product® brand shower stalls, dressing compartments and vanities, including products sold under the company names (Santana©, Comtec©, Capitol©) (hereinafter "warranted products") are warranted by the manufacturer to a corporation or other commercial entity which purchases the partitions and lockers for use in the conduct of its business to be free from defects in material and workmanship that (i) occur as a direct result of the manufacturing process; (ii) occur under normal use and service; (iii) occur during the warranty period; and (iv) result in breakage or delamination. Limited warranty periods are as follows:

Lockers/Benches

Tufftec Lockers ®	25 years
Tufftec ™ Benches	25 years
Duralife Lockers ™	15 years

Bathroom Partitions

Hiny Hiders ® Bathroom Partitions	25 years
Eclipse Partitions ™ *Patent Pending*	25 years
Resistall ® Bathroom Partitions	5 years

Shower Stalls/Vanities/Dressing Compartments

Scranton Products ® Shower Stalls	25 years
Scranton Products ® Vanities	25 years
Scranton Products ® Dressing Compartments	25 years

This limited warranty is subject to the following conditions:

1. The warranted products have been installed in accordance with the manufacturer's written instructions and drawings (as contained in the instruction sheet supplied with the order).

2. The limited warranty is effective only with regard to the original installation of the warranted products and not to any subsequent installation that has altered the warranted product without the consent of the manufacturer.

3. The limited warranty shall not be applicable if the defect in the warranted product has resulted from any failure or defect in the building or substructure to which the warranted product is attached (including but not limited to settling, shifting, distorting, or movement of the walls or foundation of the structure), extraordinary wear and tear, violent action of the elements (such as sunlight, lightening, hurricane, tornado, or hail), vandalism, misuse, neglect, or improper handling of the warranted product, during or after installation, or improper or insufficient ventilation of the building to which the warranted product is attached.

Subject to the above conditions, in the event that the warranted product or any portion thereof, is found to be defective in workmanship or materials within limited warranty period from the date of receipt by customer, the Manufacturer will repair or replace the defective material, or will refund the original purchase price of the defective material. The choice of remedy is in Manufacturer's sole discretion. The Manufacturer will not be liable for labor and/or removal costs connected with the claim. Replacement product will be provided as close to the original color and design as possible, although it is not guaranteed to match completely. In the event of repair or replacement, the original limited warranty shall apply to the repaired or replaced portion of the warranted products and will extend for the balance of the warranty period in effect at the time the material proved defective.

THE WARRANTY STATEMENTS CONTAINED IN THIS LIMITED WARRANTY SET FORTH THE ONLY WARRANTIES EXTENDED BY SCRANTON PRODUCTS AND ARE IN LIEU OF ALL OTHER CONDITIONS AND WARRANTIES, EITHER EXPRESSED OR IMPLIED, INCLUDING WITHOUT LIMITATION, THE IMPLIED WARRANTIES OF MERCHANTABILITY AND FITNESS FOR A PARTICULAR PURPOSE. THE PROVISIONS OF THIS WARRANTY SHALL CONSTITUTE THE ENTIRE LIABILITY OF SCRANTON PRODUCTS AND THE PURCHASER/PROPERTY OWNER'S EXCLUSIVE REMEDY FOR BREACH OF THIS WARRANTY. IN NO EVENT SHALL SCRANTON PRODUCTS BE LIABLE TO THE PURCHASER/PROPERTY OWNER FOR SPECIAL, INCIDENTAL, INDIRECT, CONSEQUENTIAL, OR PUNITIVE DAMAGES ARISING FROM THE USE OF THE WARRANTED PRODUCTS OR THE BREACH OF ANY EXPRESS OR IMPLIED WARRANTY. The laws of some states and provinces do not allow the exclusion, limitation or variation of certain conditions or warranties implied by legislation so the above limitations or exclusions may not apply to you. This Limited Warranty gives you specific legal rights and you may also have other rights that vary from state to state and province to province.

Any claim under such warranties must be made during the applicable warranty period and shall be asserted by contacting: Scranton Products, (Santana/Comtec/Capitol) 801 E. Corey Street-Scranton, PA 18505-Phone# 800-445-5148-Fax# 800-551-6993.